HEARKEN® FLOW CONTROL

BROCHURE

Welcome to HEARKEN

Actuators and Controls

WECHAT WEB

Hearken Here We Can

The Trusted, Passionate and focused Partner in Valve Automation

At HEARKEN FLOW,The founding principle of Hearkenflow is simple: to Listen our customers needs first, to develop the innovative valve actuators solutions , to meet the unique needs of our customers, Along the way, To help our customers to solve the problems in Valve Automation. We are growing our brand in Pneumatic and Electric Actuators, Accessories..

- Experienced team
- Large inventory
- Convenient consultation

WHY WE ARE DIFFERENT

We offer a complete valve automation solution by the applications experience and customization capabilites, with an experienced support team to guide you in selection, installation, and project support.In addition we maintain an extensive supply of product inventory on hand so that we can quickly fulfill orders and reduce wait times. Our sales and support staff are readily available and accessible so that customers get the answers they need quickly.

THE TARGET WE ARE PURSUING

High-quality — low cost — Reliable solution

- To built A strong Reputation in Providing Quality, Cost Effective , Reliable And Robust Performance Solutions for Valve Automation,
- Inclued Pneumatic Actuators, Electrically Actuators,Actuated Valves.

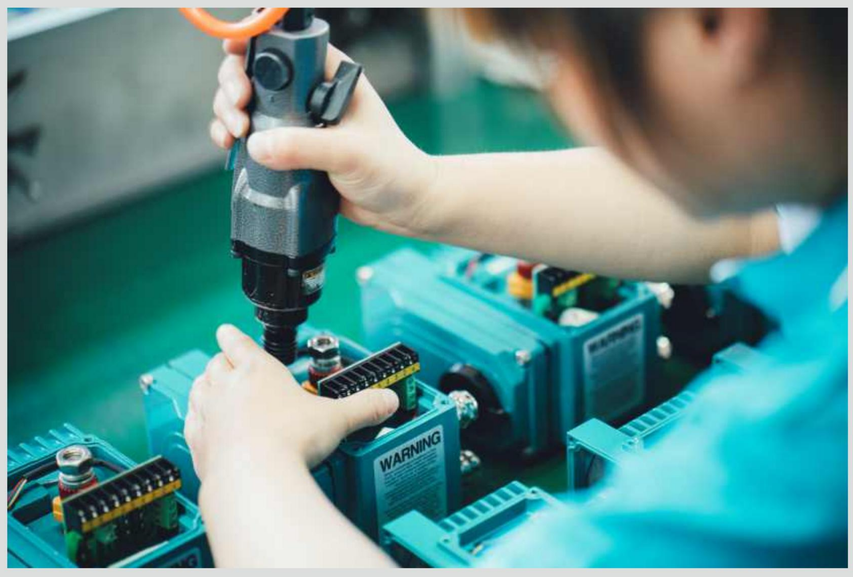

COMMITMENT TO QUALITY

At HEARKEN FLOW means performance, All products manufactured by HEARKEN FLOW are warranted against defects in material and workmanship for a period of 18months from the day of startup. Each of our products are tested at the factory. we are confident that our products meet or exceed all applicable standards before they ever leave our facility. We are an ISO 9001-2008 certified company. Our Valve Actuators Has Applied for SIL3 Certificate, ATEX Certificate ,CE,Explosion-proof Certificate, IP68 Weather proof etc....

Copyright owership belongs to HEARKEN® FLOW CONTROL shall not be reproduced,copied,or used in other ways without permission otherwise we will have the right to pursue legal responsibilities.

As we are continually developing our products,their design is subect to change without notice, Latest information is available on info@hearkenflow.com

www.hearkenflow.com
www.hfvalveactuator.com

Rev. April 01, 2021

HEX Explosion-proof Series Electric Actuator

Description

The HEX series electric actuators are used to control 0~90° rotation valve and other similar products, such as butterfly valve, ball valve, throttle, plug valves, louver valve, etc. It uses AC415V ,380v,240v.110 v ,DC12V,24 V and 220V voltage to be the driving source ,and the actuator can be reset itself (with power down reset function) ,4-20mA current signal or 0-10VDC voltage signal to be the controling signal, driving the valve to the required position,so that realize the automation control. They can be widely apply to petroleum,chemical industry.electric power, metallurgy, pharmaceutical, papermaking, energy. water treatment, ship,textile, food processing, building automation and other fields.Meanwhile , which with small volume, light weight, elegant appearance, unique and compact structure, rapid in opening and closing ,easy installation, small operation torque, easy operating, digital display for valve location, no need in maintenance and safe using and convenient, and many other advantages.

Performance features

- Small volume ,light weight ,easy installation and maintenance
- Simple and compact structure ,90 rotation ,rapid in opening and closing
- Small torque in operating , light and handy
- Flow characteristics tending to straight line, good regulation performance.
- Multiple control signals, switch control.
- Proportional (modulation) control: 0-10vdc or 4-20mA.
- Feedback output can be selected 4-20mA, auxiliary switch and feedback potentiometer (0-1k)

Main Product function

- Long time diving working,the protection class can reachIP68.
- The actuator is in charge state,with power down reset function,including
- open restting,closing resetting and no resstting,optional factory setting.

Testing For All Actuators

All actuators manufactured by HEARKEN are individually tested, Testing is carried out to check the leakage in both internal and external,The angle of rotation and Torque values.All bodies are stamped with year,month of production,size and serial number.

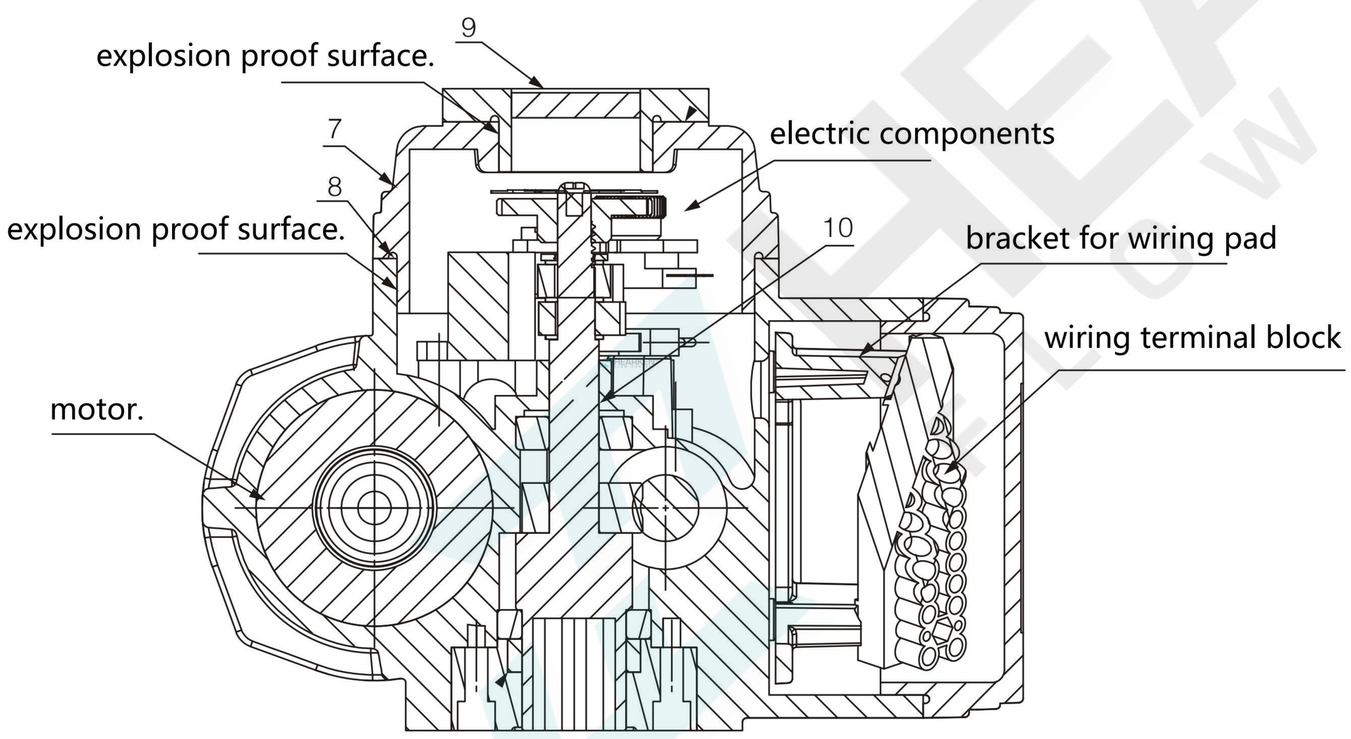

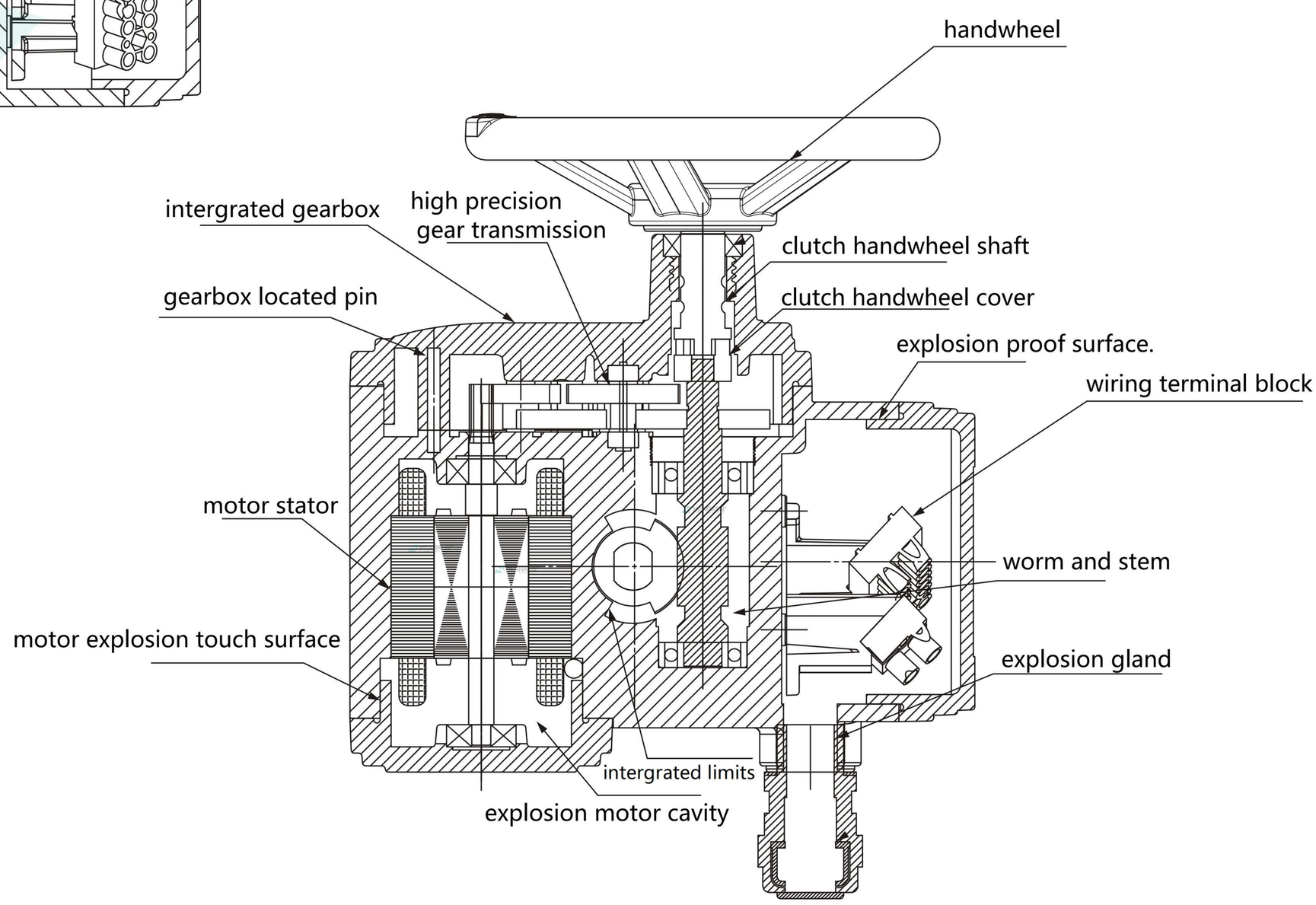

Copyright owership belongs to HEARKEN® FLOW CONTROL shall not be reproduced,copied,or used in other ways without permission otherwise we will have the right to pursue legal responsibilities.
As we are continually developing our products,their design is subect to change without notice, Latest information is available on info@hearkenflow.com www.hearkenflow.com www.hfvalveactuator.com
Rev. April 01, 2021

HEX005 Dimension in mm

Technical Parameter and Specifications (On/Off or Modulating Version)

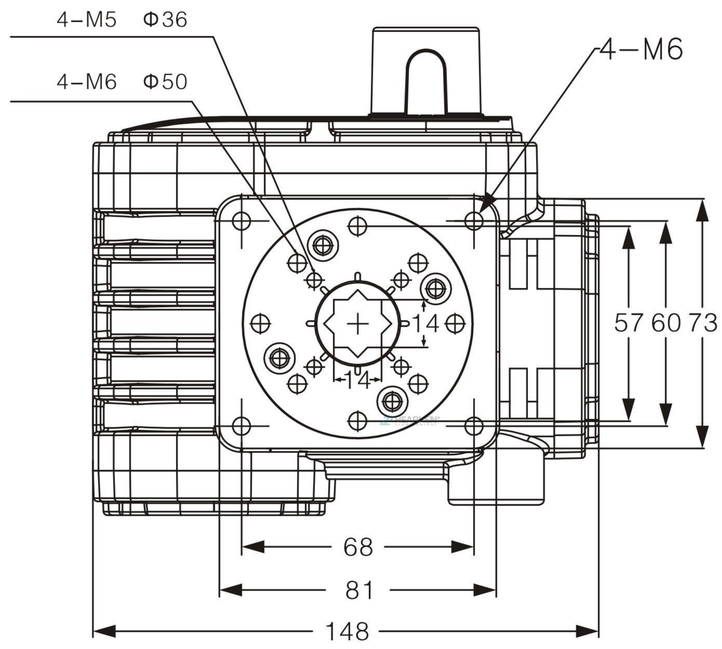

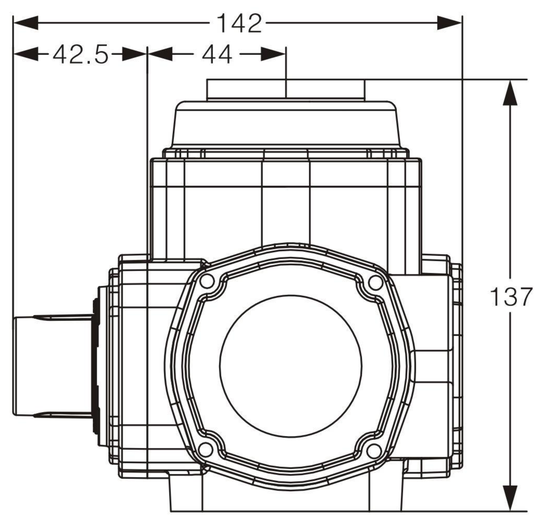

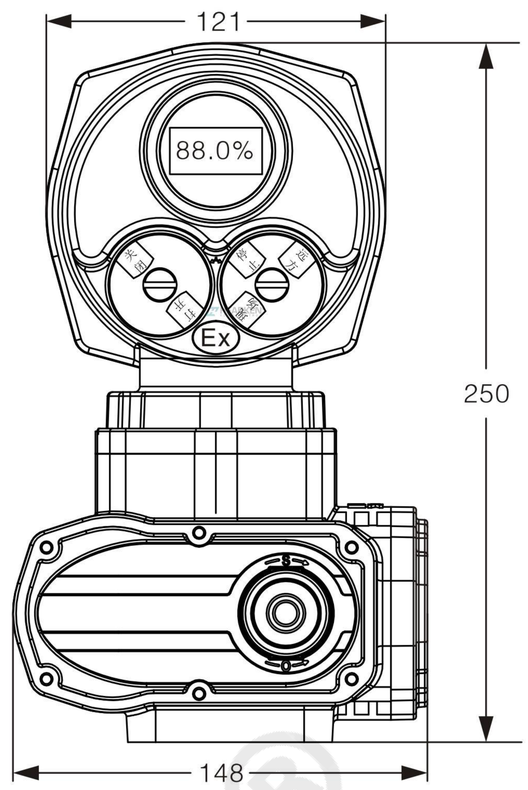

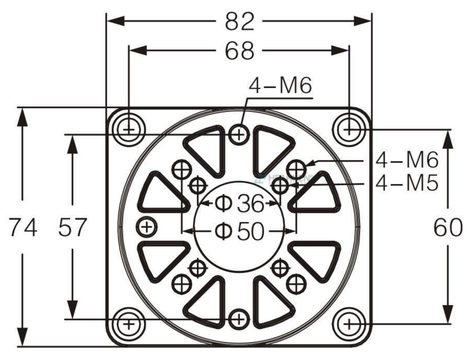

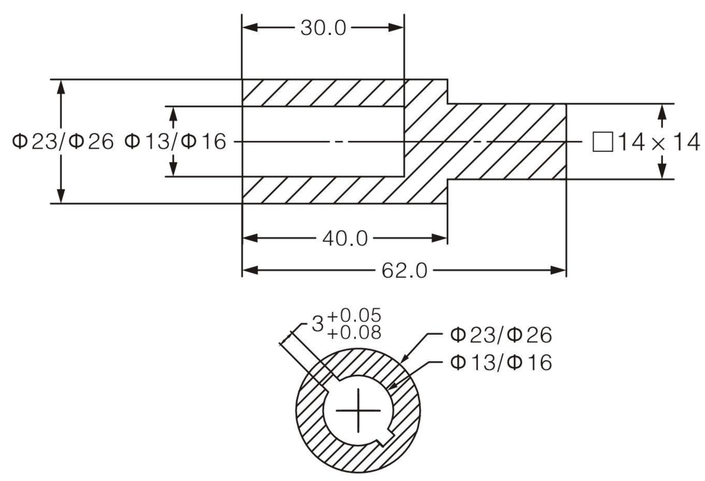

Straight Mounted Parameter	
Star Adaptor	□9x9 □11x11 □14x14
Flange Centre Distance	F03 F05
Valve Stem	Height≤22mm

Model / Power / Parameter / Performance	HEX005								
	DC12V	DC24V	DC36V	DC110V	DC220V	AC24V	AC110V	AC220V	AC380V
Motor Power (W)	10	10	10	10	10	10	10	10	10
Rated Current (A)	2.6	1.5	1	0.4	0.2	2.4	0.6	0.25	0.15
Standard Time / Torque	15S/30Nm					30S/50Nm			
Optional Time / Torque	7.5S/15Nm 10S/20Nm 15S/30Nm					15S/30Nm 20S/40Nm 30S/50Nm			
Range of Turning Angle	Standard 0-90°, can be customized 0-360° any Angle								
Optional Control Circuit	A Type/B Type/C Type/D Type/E Type/F Type/H Type/ZT Type/ZK Type								
Weight (Kg)	3.1								
Insulating Resistance	AC24V:100MΩ/250VDC AC110V/AC220V/AC380C: 100MΩ/500VDC								
Withstand Voltage Class	AC240V:500VAC 1minute, AC110V/AC220V:1500VAC 1minute, AC380V:1800VAC 1minute								
Protection Class	IP67/IP68								
Explosion-Proof	ExdII CT6								
Installation	360°C at any angle								
Electrical interface size	Outer wire 1-G1/2,, inner wire 1-G3/4, advised to use ⌀9-⌀12 cable								
Ambient Temperature	-20℃~+60℃								
Optional Function	1.Diving type; 2.Clutch handwheel; 3.Heat the dehumidifier; 4.Over torque protection; 5.Power reset 6.High low temperature -40℃~+80℃								

Copyright owership belongs to HEARKEN® FLOW CONTROL shall not be reproduced,copied,or used in other ways without permission otherwise we will have the right to pursue legal responsibilities.
As we are continually developing our products,their design is subect to change without notice, Latest information is available on info@hearkenflow.com www.hearkenflow.com www.hfvalveactuator.com

HEX010 Dimension in mm

Technical Parameter and Specifications (On/Off or Modulating Version)

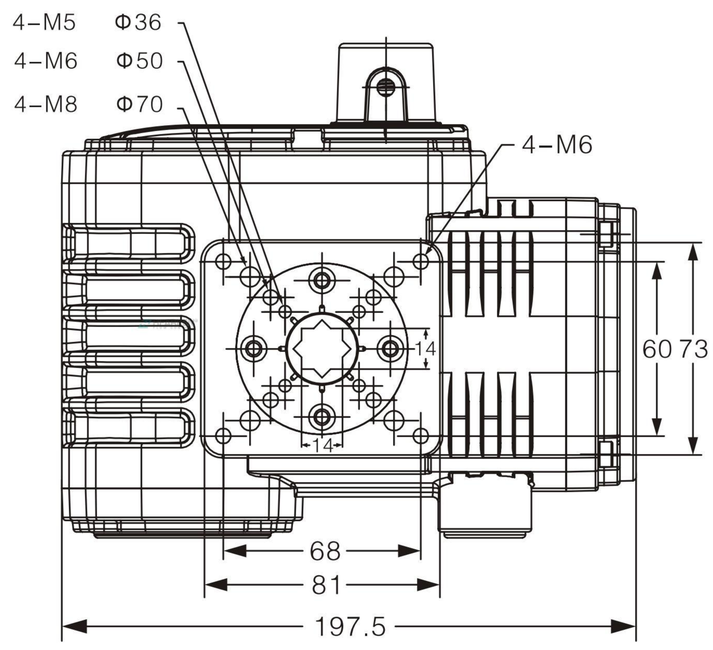

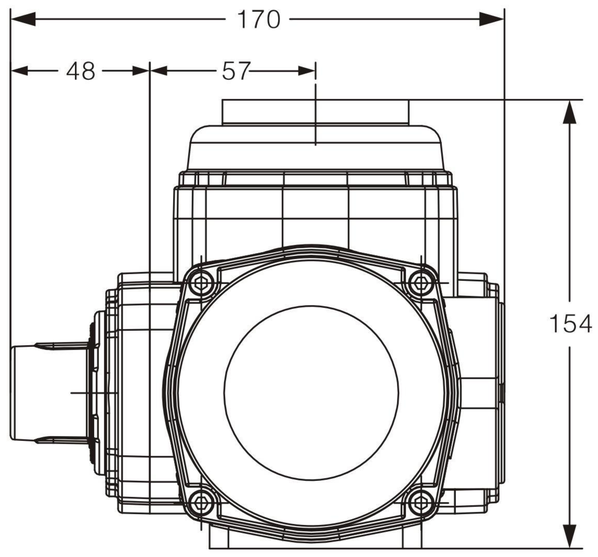

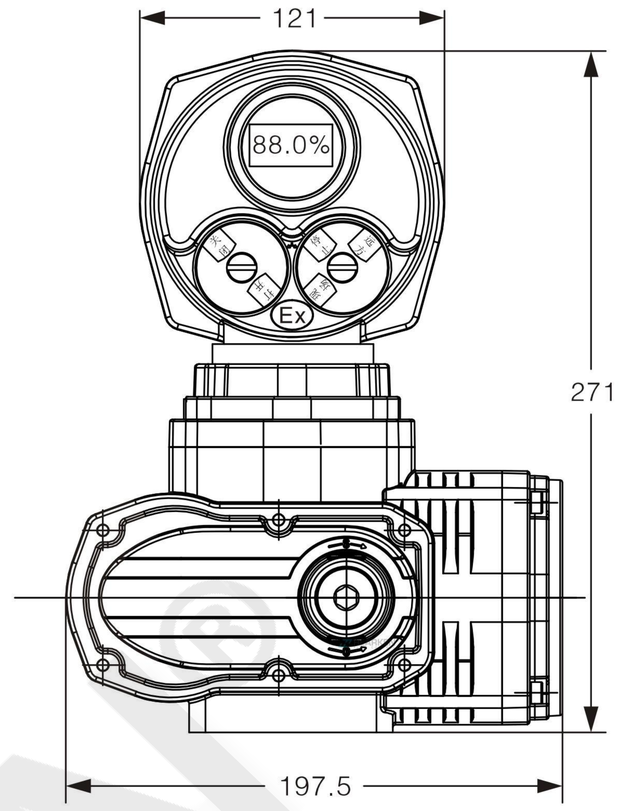

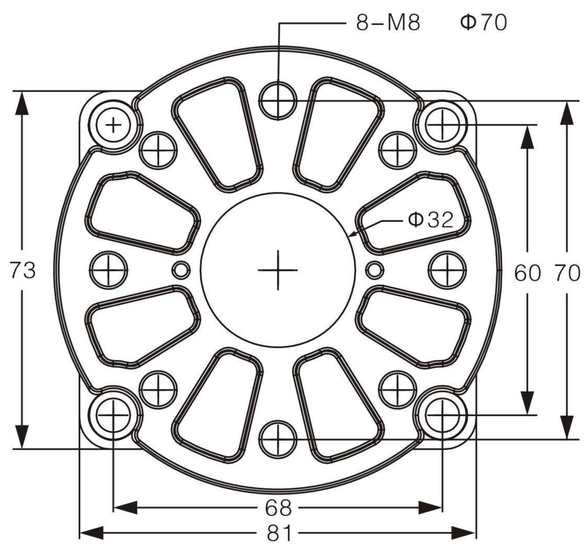

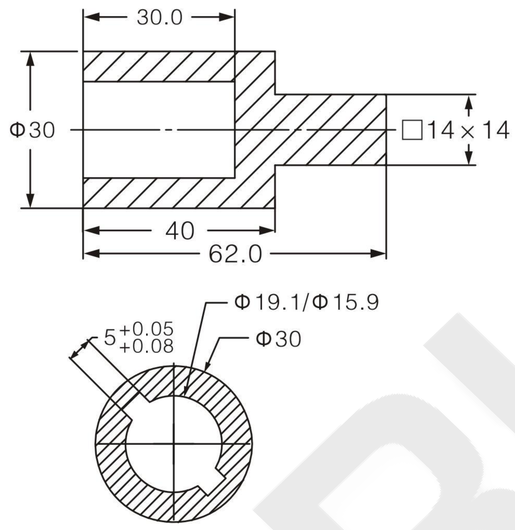

Straight Mounted Parameter	
Star Adaptor	□9x9 □11x11 □14x14
Flange Centre Distance	F03 F05 F07
Valve Stem	Height≤22mm

Model / Power / Parameter / Performance	HEX010								
	DC12V	DC24V	DC36V	DC110V	DC220V	AC24V	AC110V	AC220V	AC380V
Motor Power (W)	20	20	20	20	20	20	20	20	20
Rated Current (A)	5	2.5	1.5	1.1	0.5	3	0.7	0.3	0.2
Standard Time / Torque	17S/40Nm					35S/100Nm			
Optional Time / Torque	12S/30Nm 17S/40Nm 22S/100Nm					16S/40Nm 25S/60Nm 45S/100Nm			
Range of Turning Angle	Standard 0-90°, can be customized 0-360° any Angle								
Optional Control Circuit	A Type/B Type/C Type/D Type/E Type/F Type/H Type/ZT Type/ZK Type								
Weight (Kg)	5.15								
Insulating Resistance	AC24V:100MΩ/250VDC AC110V/AC220V/AC380C: 100MΩ/500VDC								
Withstand Voltage Class	AC240V:500VAC 1minute, AC110V/AC220V:1500VAC 1minute, AC380V:1800VAC 1minute								
Protection Class	IP67/IP68								
Explosion-Proof	ExdII CT6								
Installation	360°C at any angle								
Electrical interface size	Outer wire 1-G1/2,, inner wire 1-G3/4, advised to use ⌀9-⌀12 cable								
Ambient Temperature	-20℃~+60℃								
Optional Function	1.Diving type; 2.Clutch handwheel; 3.Heat the dehumidifier; 4.Over torque protection; 5.Power reset 6.High low temperature -40℃~+80℃								

Copyright owership belongs to HEARKEN® FLOW CONTROL shall not be reproduced,copied,or used in other ways without permission otherwise we will have the right to pursue legal responsibilities.
As we are continually developing our products,their design is subect to change without notice, Latest information is available on info@hearkenflow.com

HEX020 Dimension in mm

Technical Parameter and Specifications (On/Off or Modulating Version)

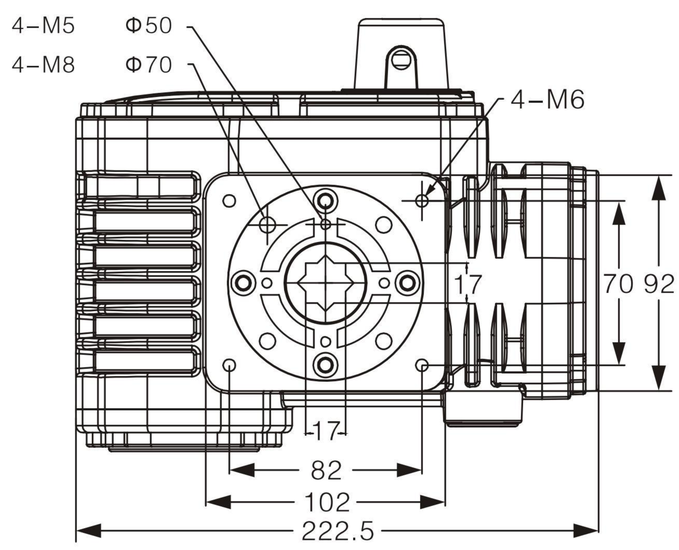

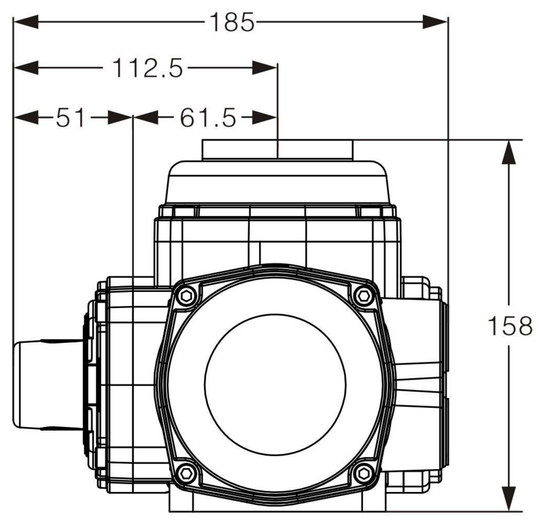

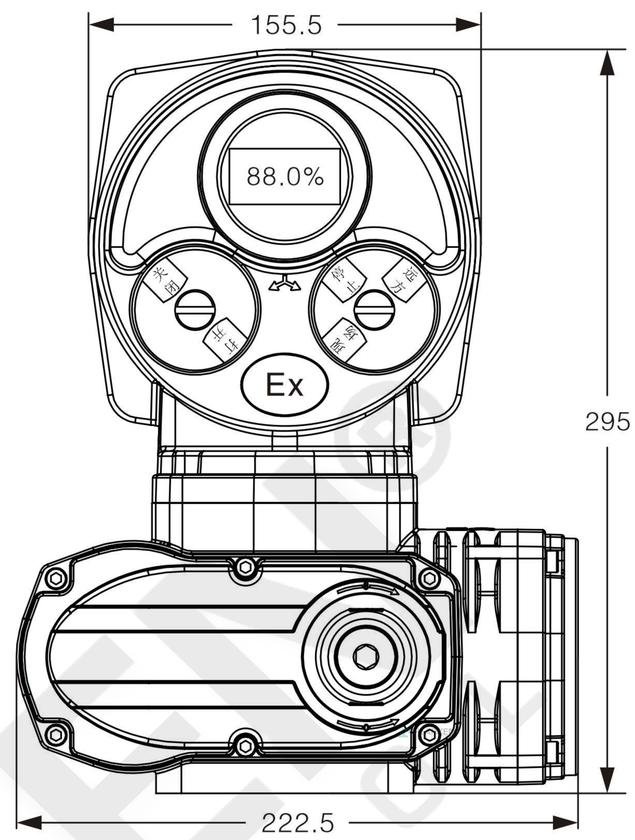

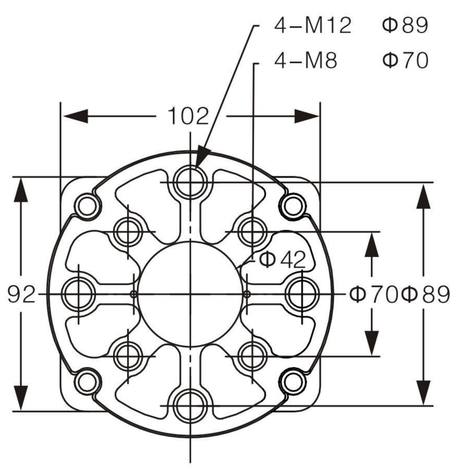

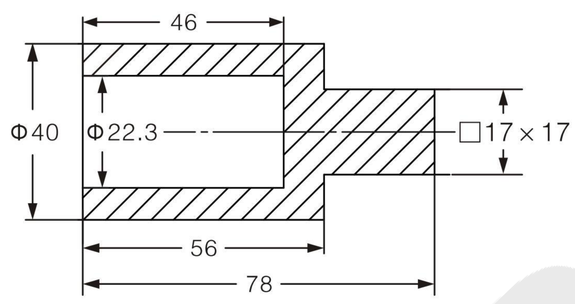

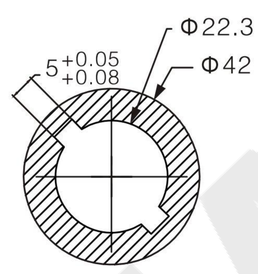

Straight Mounted Parameter	
Star Adaptor	□9x9 □11x11 □14x14 □17x17
Flange Centre Distance	F03 F05 F07
Valve Stem	Height≤22mm

Performance / Parameter / Power / Model	HEX020								
	DC12V	DC24V	DC36V	DC110V	DC220V	AC24V	AC110V	AC220V	AC380V
Motor Power (W)	30	30	30	30	30	30	30	30	30
Rated Current (A)	6.6	3	1.6	0.68	0.3	4	0.7	0.35	0.2
Standard Time / Torque	15S/100Nm					30S/200Nm			
Optional Time / Torque	3.5S/25Nm 10S/50Nm 15S/100Nm 30S/200Nm					15S/100Nm 20S/120Nm 45S/200Nm 60S/200Nm			
Range of Turning Angle	Standard 0-90°, can be customized 0-360° any Angle								
Optional Control Circuit	A Type/B Type/C Type/D Type/E Type/F Type/H Type/ZT Type/ZK Type								
Weight (Kg)	6.7								
Insulating Resistance	AC24V:100MΩ/250VDC AC110V/AC220V/AC380C: 100MΩ/500VDC								
Withstand Voltage Class	AC240V:500VAC 1minute, AC110V/AC220V:1500VAC 1minute, AC380V:1800VAC 1minute								
Protection Class	IP67/IP68								
Explosion-Proof	ExdII CT6								
Installation	360°C at any angle								
Electrical interface size	Outer wire 1-G1/2,, inner wire 1-G3/4, advised to use ⌀9-⌀12 cable								
Ambient Temperature	-20℃~+60℃								
Optional Function	1.Diving type; 2.Clutch handwheel; 3.Heat the dehumidifier; 4.Over torque protection; 5.Power reset 6.High low temperature -40℃~+80℃								

Copyright owership belongs to HEARKEN® FLOW CONTROL shall not be reproduced,copied,or used in other ways without permission otherwise we will have the right to pursue legal responsibilities.
As we are continually developing our products,their design is subect to change without notice, Latest information is available on info@hearkenflow.com www.hearkenflow.com www.hfvalveactuator.com
Rev. April 01, 2021

HEX030 Dimension in mm

Technical Parameter and Specifications (On/Off or Modulating Version)

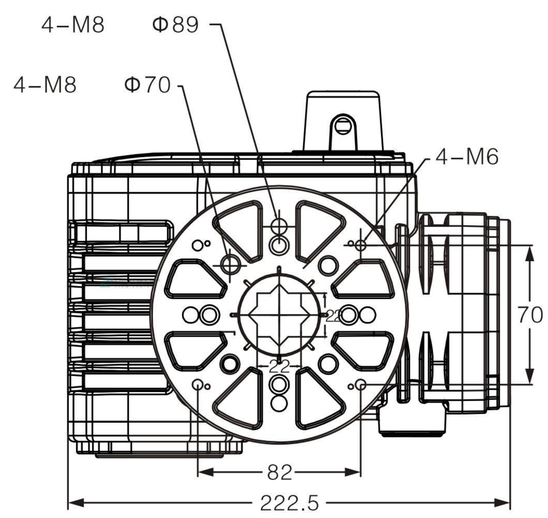

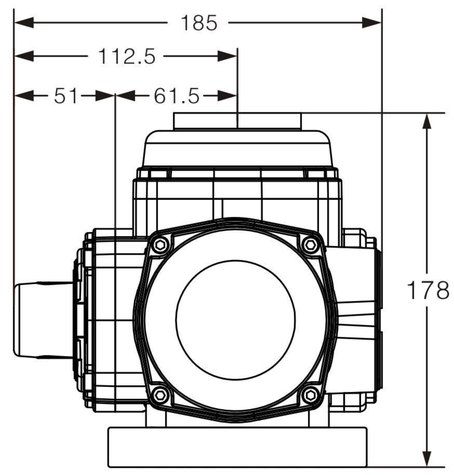

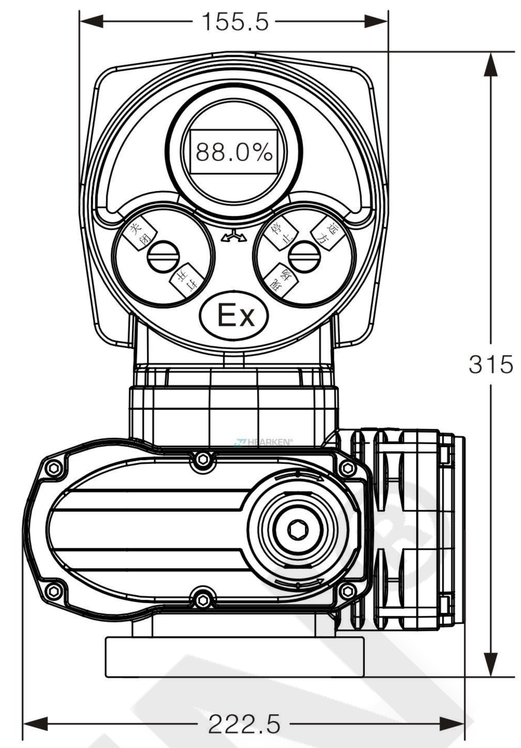

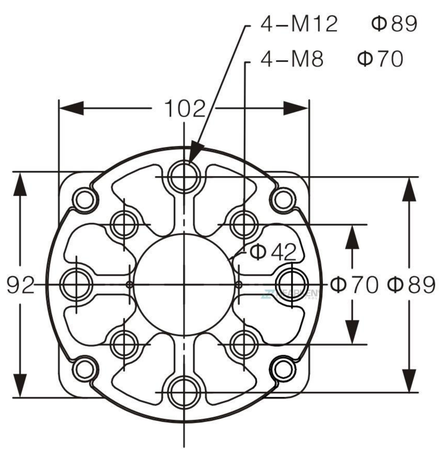

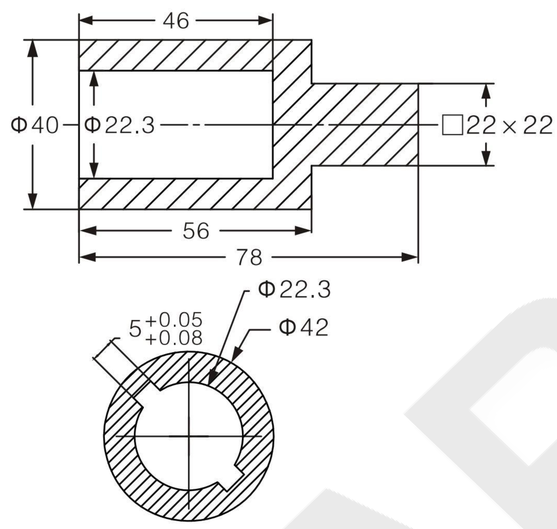

Straight Mounted Parameter	
Star Adaptor	□9x9 □11x11 □14x14 □17x17 □22x22
Flange Centre Distance	F03 F05 F07
Valve Stem	Height≤22mm

Performance Parameter / Power / Model	HEX030								
	DC12V	DC24V	DC36V	DC110V	DC220V	AC24V	AC110V	AC220V	AC380V
Motor Power (W)	40	40	40	40	40	40	40	40	40
Rated Current (A)	8	4	3	0.8	0.5	2	0.8	0.4	0.3
Standard Time / Torque	15S/150Nm					30S/300Nm			
Optional Time / Torque	5S/50Nm 7.5S/60Nm 13S/100Nm					10S/80Nm 13S/100Nm 20S/150Nm 35S/300Nm			
Range of Turning Angle	Standard 0-90°, can be customized 0-360° any Angle								
Optional Control Circuit	A Type/B Type/C Type/D Type/E Type/F Type/H Type/ZT Type/ZK Type								
Weight (Kg)	7.4								
Insulating Resistance	AC24V:100MΩ/250VDC AC110V/AC220V/AC380C: 100MΩ/500VDC								
Withstand Voltage Class	AC240V:500VAC 1minute, AC110V/AC220V:1500VAC 1minute, AC380V:1800VAC 1minute								
Protection Class	IP67/IP68								
Explosion-Proof	ExdII CT6								
Installation	360°C at any angle								
Electrical interface size	Outer wire 1-G1/2,, inner wire 1-G3/4, advised to use ⌀9-⌀12 cable								
Ambient Temperature	-20℃~+60℃								
Optional Function	1.Diving type; 2.Clutch handwheel; 3.Heat the dehumidifier; 4.Over torque protection; 5.Power reset 6.High low temperature -40℃~+80℃								

Copyright owership belongs to HEARKEN® FLOW CONTROL shall not be reproduced,copied,or used in other ways without permission otherwise we will have the right to pursue legal responsibilities.
As we are continually developing our products,their design is subect to change without notice, Latest information is available on info@hearkenflow.com www.hearkenflow.com www.hfvalveactuator.com
Rev. April 01, 2021

HEX040 Dimension in mm

Technical Parameter and Specifications (On/Off or Modulating Version)

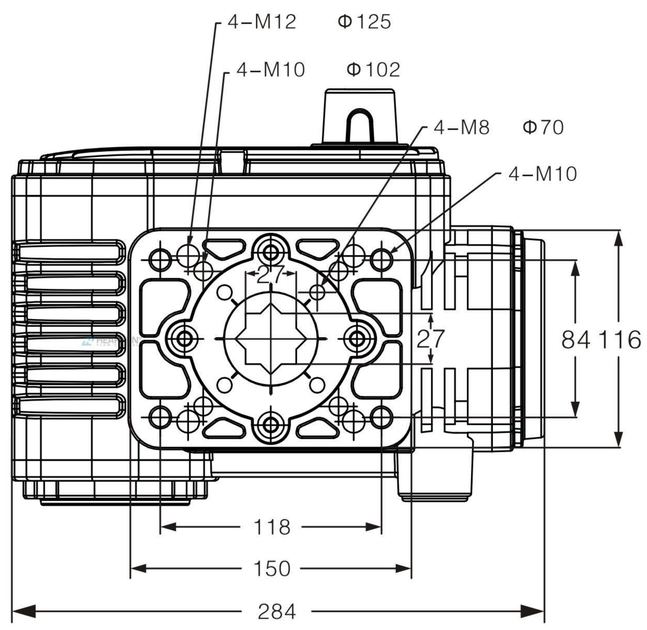

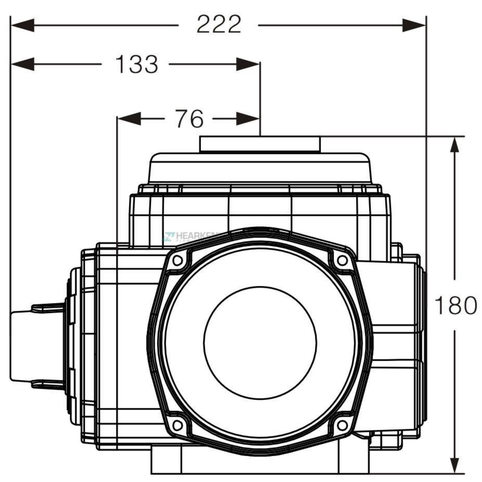

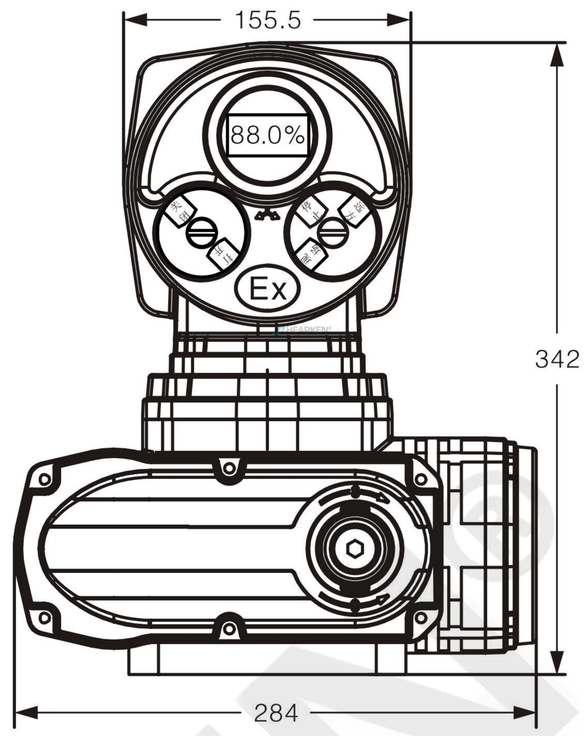

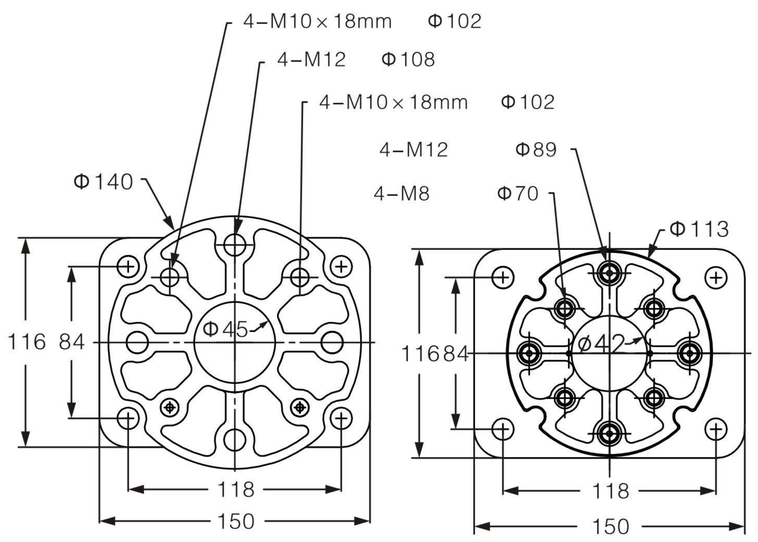

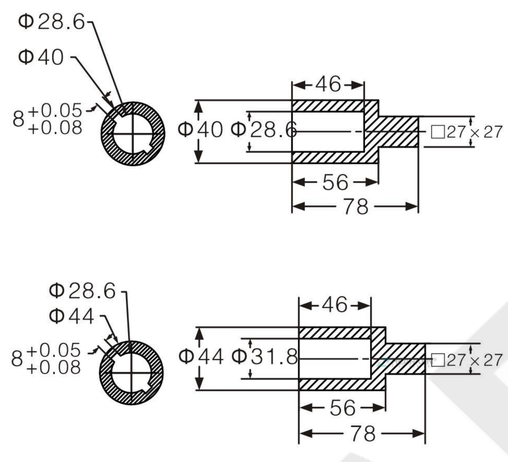

Straight Mounted Parameter	
Star Adaptor	□17x17 □22x22 □27x27
Flange Centre Distance	F07 F10
Valve Stem	Height≤22mm

Performance Parameter / Power / Model	HEX040								
	DC12V	DC24V	DC36V	DC110V	DC220V	AC24V	AC110V	AC220V	AC380V
Motor Power (W)	90	90	90	90	90	90	90	90	90
Rated Current (A)	15.2	8.6	4.5	2.8	1.2	8.1	2	0.9	0.4
Standard Time / Torque	15S/200Nm					30S/400Nm			
Optional Time / Torque	7.5S/150Nm					7.5S/150Nm 15S/200Nm			
Range of Turning Angle	Standard 0-90°, can be customized 0-360° any Angle								
Optional Control Circuit	A Type/B Type/C Type/D Type/E Type/F Type/H Type/ZT Type/ZK Type								
Weight (Kg)	12								
Insulating Resistance	AC24V:100MΩ/250VDC AC110V/AC220V/AC380C: 100MΩ/500VDC								
Withstand Voltage Class	AC240V:500VAC 1minute, AC110V/AC220V:1500VAC 1minute, AC380V:1800VAC 1minute								
Protection Class	IP67/IP68								
Explosion-Proof	ExdII CT6								
Installation	360°C at any angle								
Electrical interface size	Outer wire 1-G1/2,, inner wire 1-G3/4, advised to use ⌀9-⌀12 cable								
Ambient Temperature	-20℃~+60℃								
Optional Function	1.Diving type; 2.Clutch handwheel; 3.Heat the dehumidifier; 4.Over torque protection; 5.Power reset 6.High low temperature -40℃~+80℃								

Copyright owership belongs to HEARKEN® FLOW CONTROL shall not be reproduced,copied,or used in other ways without permission otherwise we will have the right to pursue legal responsibilities.
As we are continually developing our products,their design is subect to change without notice, Latest information is available on info@hearkenflow.com www.hearkenflow.com www.hfvalveactuator.com
Rev. April 01, 2021

HEX060 Dimension in mm

Technical Parameter and Specifications (On/Off or Modulating Version)

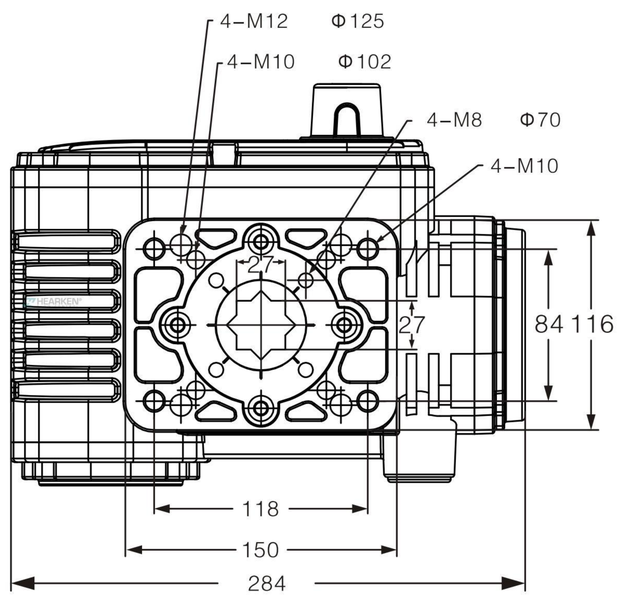

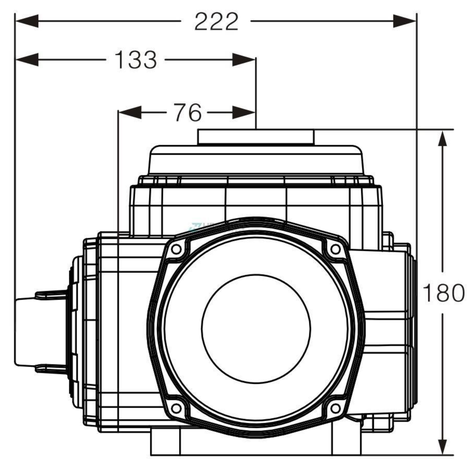

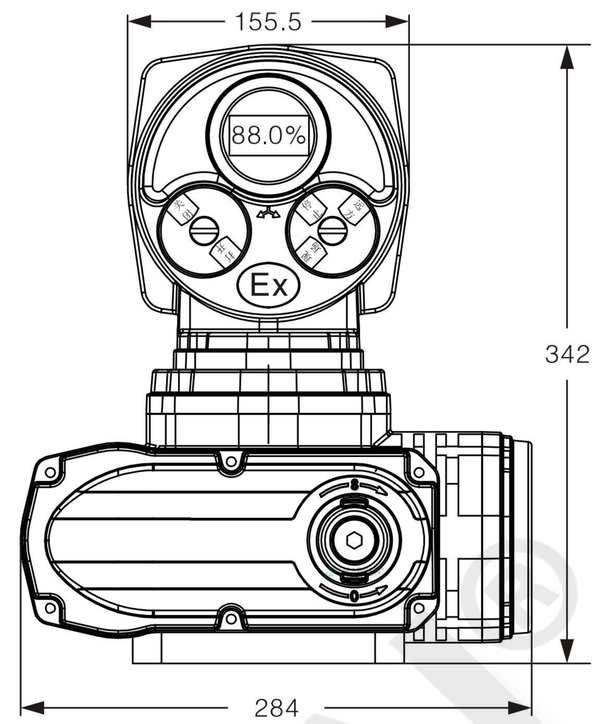

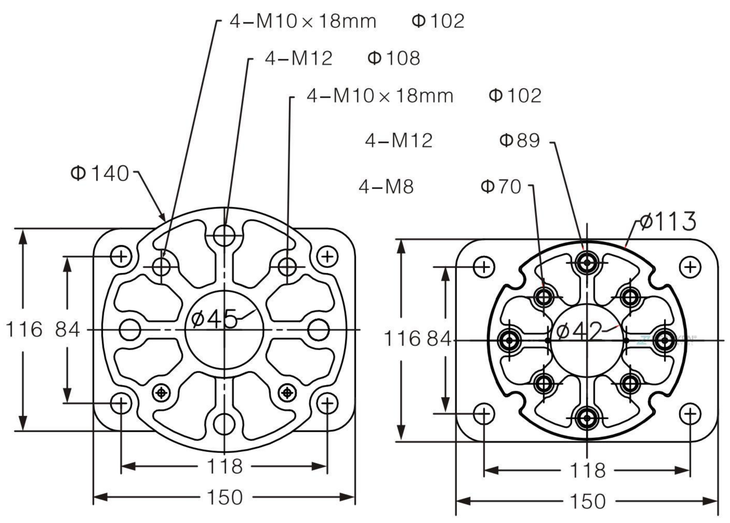

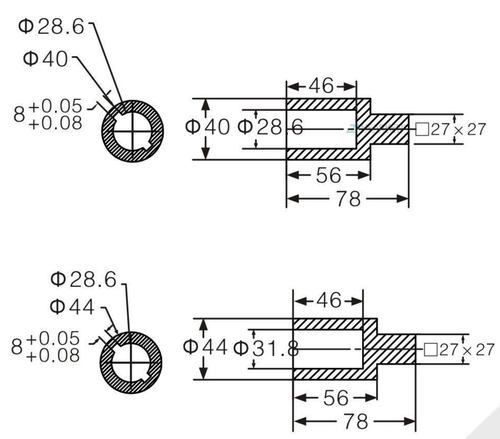

Straight Mounted Parameter	
Star Adaptor	□17x17 □22x22 □27x27
Flange Centre Distance	F07 F10
Valve Stem	Height≤22mm

Model / Power / Parameter / Performance	HEX060								
	DC12V	DC24V	DC36V	DC110V	DC220V	AC24V	AC110V	AC220V	AC380V
Motor Power (W)	120	120	120	120	120	120	120	120	120
Rated Current (A)	16	9	4.8	3	1.3	8.5	2.2	1	0.5
Standard Time / Torque	15S/300Nm					45S/600Nm			
Optional Time / Torque	7.5S/150Nm 15S/300Nm 30S/400Nm					7.5S/150Nm 15S/300Nm 30S/400Nm			
Range of Turning Angle	Standard 0-90°, can be customized 0-360° any Angle								
Optional Control Circuit	A Type/B Type/C Type/D Type/E Type/F Type/H Type/ZT Type/ZK Type								
Weight (Kg)	12.5								
Insulating Resistance	AC24V:100MΩ/250VDC AC110V/AC220V/AC380C: 100MΩ/500VDC								
Withstand Voltage Class	AC240V:500VAC 1minute, AC110V/AC220V:1500VAC 1minute, AC380V:1800VAC 1minute								
Protection Class	IP67/IP68								
Explosion-Proof	ExdII CT6								
Installation	360°C at any angle								
Electrical interface size	Outer wire 1-G1/2,, inner wire 1-G3/4, advised to use ⌀9-⌀12 cable								
Ambient Temperature	-20℃~+60℃								
Optional Function	1.Diving type; 2.Clutch handwheel; 3.Heat the dehumidifier; 4.Over torque protection; 5.Power reset 6.High low temperature -40℃~+80℃								

Copyright owership belongs to HEARKEN® FLOW CONTROL shall not be reproduced,copied,or used in other ways without permission otherwise we will have the right to pursue legal responsibilities.
As we are continually developing our products,their design is subect to change without notice, Latest information is available on info@hearkenflow.com www.hearkenflow.com www.hfvalveactuator.com
Rev. April 01, 2021

HEX100 Dimension in mm

Technical Parameter and Specifications (On/Off or Modulating Version)

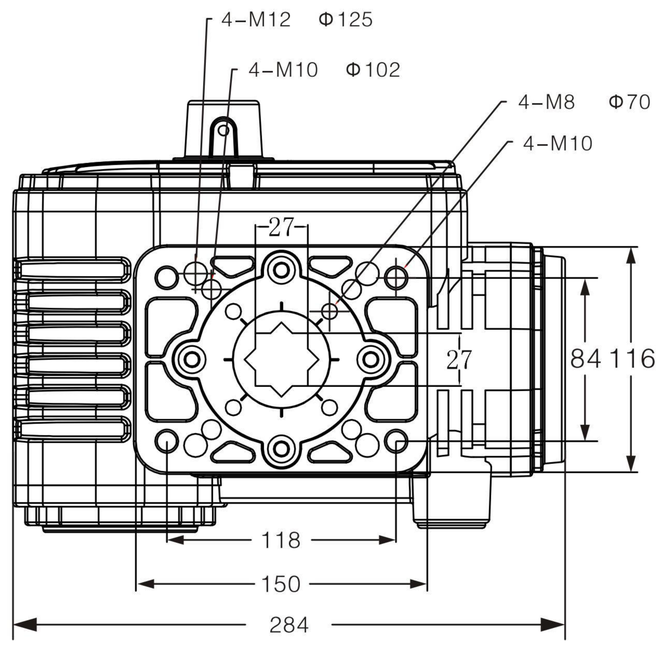

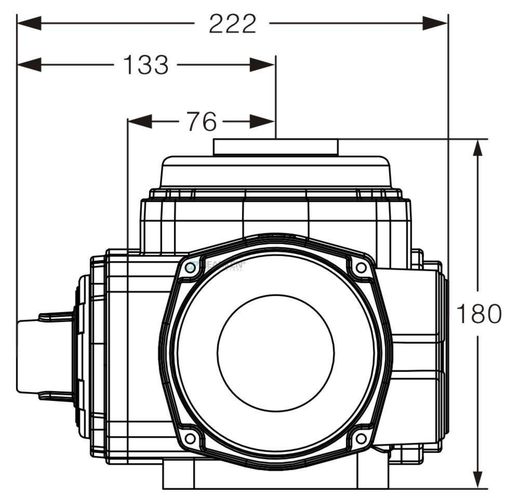

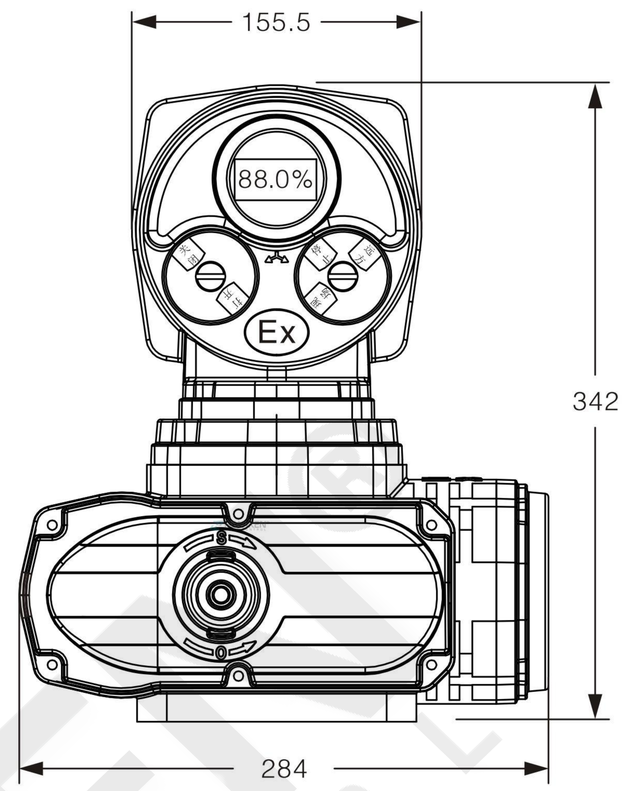

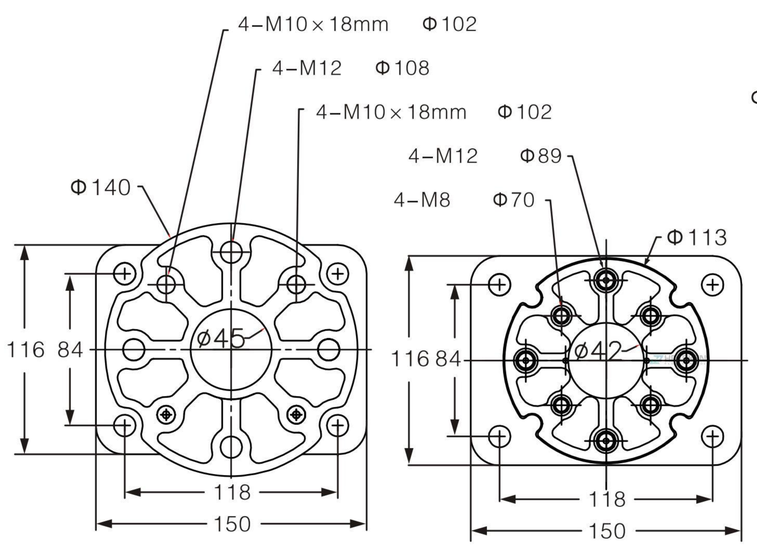

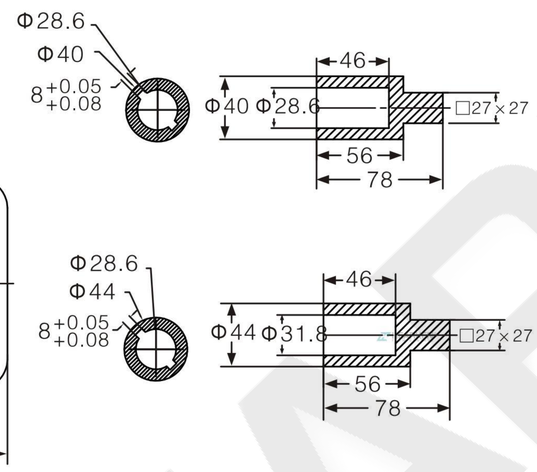

Straight Mounted Parameter	
Star Adaptor	□17x17 □22x22 □27x27
Flange Centre Distance	F07 F10
Valve Stem	Height≤22mm

Performance Parameter / Power / Model	HEX100								
	DC12V	DC24V	DC36V	DC110V	DC220V	AC24V	AC110V	AC220V	AC380V
Motor Power (W)	120	120	120	120	120	120	120	120	120
Rated Current (A)	19.2	11.6	7.6	3.4	1.4	9	2.4	1.1	0.45
Standard Time / Torque	25S/400Nm					50S/1000Nm			
Optional Time / Torque	6S/150Nm 12S/300Nm 17S/300Nm 25S/400Nm 30S/500Nm					12S/200Nm 25/400Nm 35S/600Nm			
Range of Turning Angle	Standard 0-90°, can be customized 0-360° any Angle								
Optional Control Circuit	A Type/B Type/C Type/D Type/E Type/F Type/H Type/ZT Type/ZK Type								
Weight (Kg)	13								
Insulating Resistance	AC24V:100MΩ/250VDC AC110V/AC220V/AC380C: 100MΩ/500VDC								
Withstand Voltage Class	AC240V:500VAC 1minute, AC110V/AC220V:1500VAC 1minute, AC380V:1800VAC 1minute								
Protection Class	IP67/IP68								
Explosion-Proof	ExdII CT6								
Installation	360°C at any angle								
Electrical interface size	Outer wire 1-G1/2,, inner wire 1-G3/4, advised to use ⌀9-⌀12 cable								
Ambient Temperature	-20℃~+60℃								
Optional Function	1.Diving type; 2.Clutch handwheel; 3.Heat the dehumidifier; 4.Over torque protection; 5.Power reset 6.High low temperature -40℃~+80℃								

Copyright owership belongs to HEARKEN® FLOW CONTROL shall not be reproduced,copied,or used in other ways without permission otherwise we will have the right to pursue legal responsibilities.
As we are continually developing our products,their design is subect to change without notice, Latest information is available on info@hearkenflow.com www.hearkenflow.com www.hfvalveactuator.com
Rev. April 01, 2021

HEX200 Dimension in mm

Technical Parameter and Specifications (On/Off or Modulating Version)

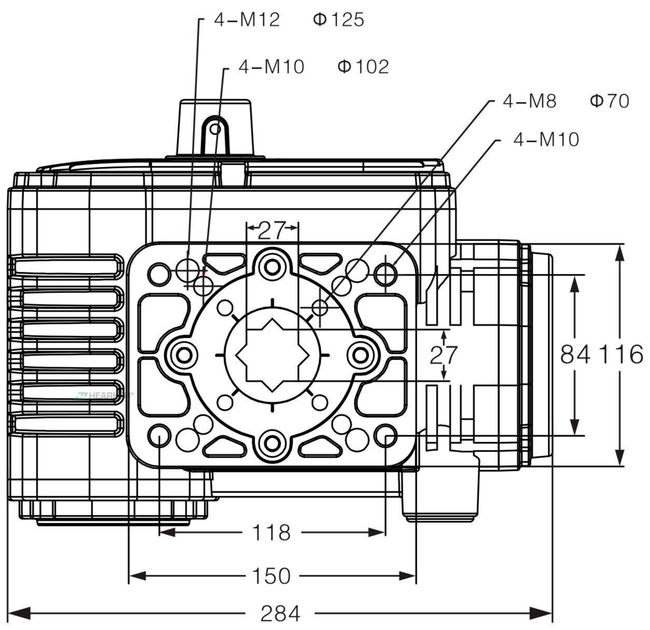

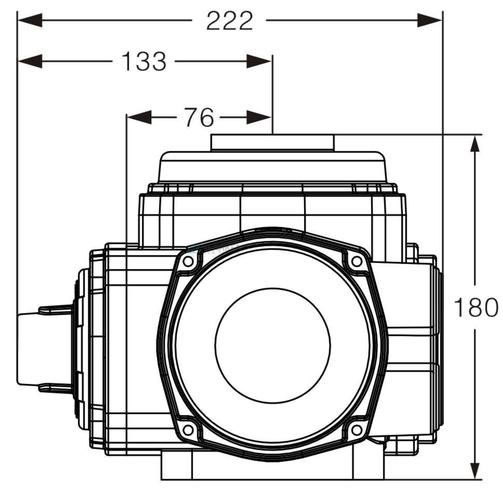

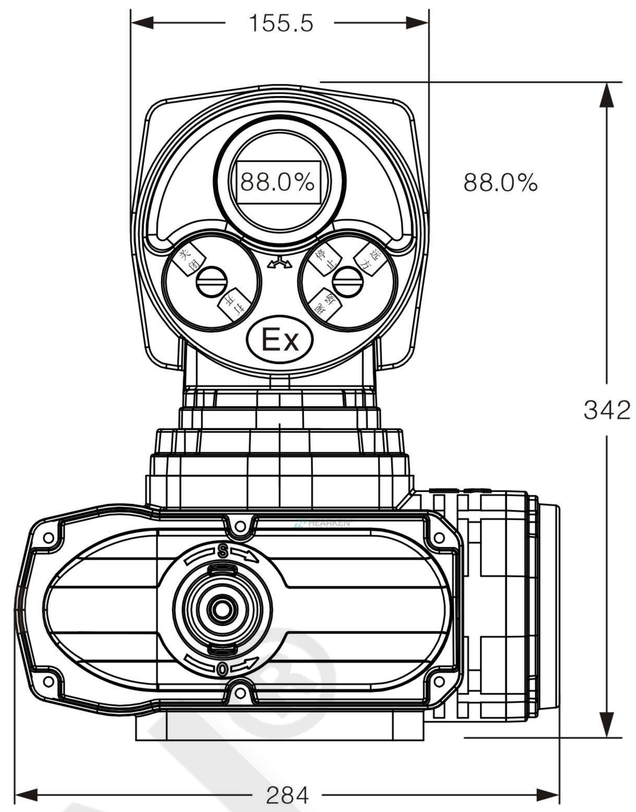

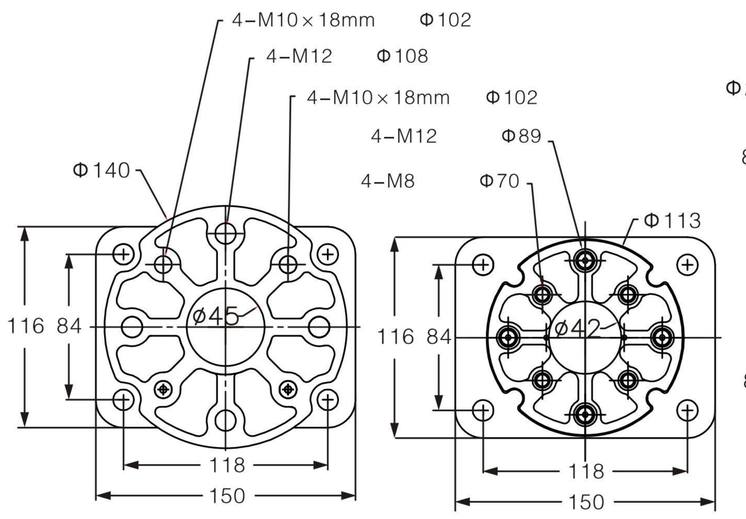

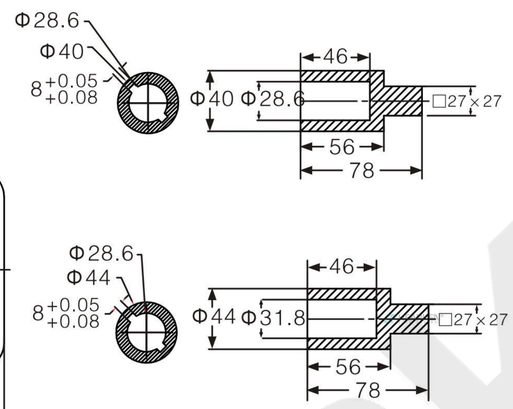

Straight Mounted Parameter	
Star Adaptor	□17x17 □22x22 □27x27
Flange Centre Distance	F07 F10
Valve Stem	Height≤22mm

Performance / Parameter / Power / Model	HEX200								
	DC12V	DC24V	DC36V	DC110V	DC220V	AC24V	AC110V	AC220V	AC380V
Motor Power (W)	180	180	180	180	180	180	180	180	180
Rated Current (A)	20	12	8	3.6	1.5	9.5	2.6	1.4	0.6
Standard Time / Torque	30S/500Nm					75S/2000Nm			
Optional Time / Torque	6S/150Nm 12S/300Nm 17S/300Nm 25S/400Nm 30S/500Nm					12s/200Nm 25/400Nm 35S/600Nm 50S/800Nm			
Range of Turning Angle	Standard 0-90°, can be customized 0-360° any Angle								
Optional Control Circuit	A Type/B Type/C Type/D Type/E Type/F Type/H Type/ZT Type/ZK Type								
Weight (Kg)	13.5								
Insulating Resistance	AC24V:100MΩ/250VDC AC110V/AC220V/AC380C: 100MΩ/500VDC								
Withstand Voltage Class	AC240V:500VAC 1minute, AC110V/AC220V:1500VAC 1minute, AC380V:1800VAC 1minute								
Protection Class	IP67/IP68								
Explosion-Proof	ExdII CT6								
Installation	360°C at any angle								
Electrical interface size	Outer wire 1-G1/2,, inner wire 1-G3/4, advised to use ⦰9-⦰12 cable								
Ambient Temperature	-20℃~+60℃								
Optional Function	1.Diving type; 2.Clutch handwheel; 3.Heat the dehumidifier; 4.Over torque protection; 5.Power reset 6.High low temperature -40℃~+80℃								

Copyright owership belongs to HEARKEN® FLOW CONTROL shall not be reproduced,copied,or used in other ways without permission otherwise we will have the right to pursue legal responsibilities.
As we are continually developing our products,their design is subect to change without notice, Latest information is available on info@hearkenflow.com www.hearkenflow.com www.hfvalveactuator.com
Rev. April 01, 2021